Ladder Rail Towel Warmers


D-TCC 30x24


D-TCW 30x24

Must only be installed on a closed non potable water system. Warranty 5 years on all ladder rails.

In areas of high humidity, units should be regularly wiped down as part of maintenance.


D-TSC 48x20

Legend for Codes:
CC = Curved Chrome
CW = Curved White
SC = Straight Chrome
SW = Straight White

Valves are not available as shown.



Optional Manual Cross Head Valves in straight and angle:
PART# V-CROSSH16 Angle
V-CROSSH16S Straight

Available for Copper, PEX.
See page 22.

Manual Straight Cross Head Valves

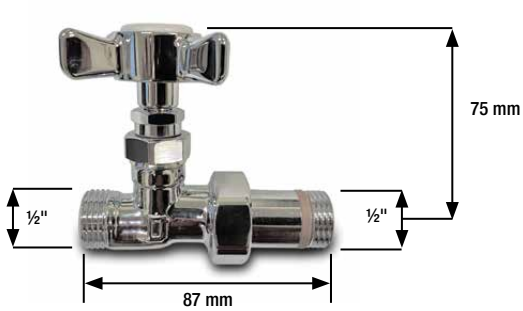

Copper and Pex Connectors not shown

EXPRESS RADIANT LTD. PURSUE A POLICY OF CONTINUING IMPROVEMENT IN DESIGN AND PERFORMANCE OF THE PRODUCTS WE SELL. THE RIGHT IS THEREFORE RESERVED TO VARY SPECIFICATIONS AND PRICING WITHOUT NOTICE.
Stelrad®, Superchannel® and Superstand® North American Distributor | ©2026 Express Radiant Ltd.

Stelrad Radiator Group

18 Ladder Rail Towel Warmers Rough-In and Technical Data

DESCRIPTION	MODEL	HEIGHT mm (inches)	LENGTH mm (inches)	OUTPUT btu/hr 120 °F AWT	OUTPUT btu/hr 140 °F AWT	OUTPUT btu/hr 160 °F AWT	WEIGHT (Lb.)
Ladder Rail Straight White	D-TSW 27x16	678 (27)	400 (16)	447	691	958	10
Ladder Rail Straight White	D-TSW 30x20	760 (30)	500 (20)	595	919	1274	13
Ladder Rail Straight White	D-TSW 30x24	760 (30)	600 (24)	714	1101	1527	16
Ladder Rail Straight White	D-TSW 48x20	1211 (48)	500 (20)	885	1366	1894	21
Ladder Rail Straight White	D-TSW 48x24	1211 (48)	600 (24)	1050	1621	2248	24
Ladder Rail Straight White	D-TSW 69x20	1744 (69)	500 (20)	1306	2015	2795	31
Ladder Rail Straight White	D-TSW 69x24	1744 (69)	600 (24)	1545	2384	3306	35
Ladder Rail Straight Chrome	D-TSC 27x16	678 (27)	400 (16)	373	576	798	10
Ladder Rail Straight Chrome	D-TSC 30x20	760 (30)	500 (20)	496	766	1062	13
Ladder Rail Straight Chrome	D-TSC 30x24	760 (30)	600 (24)	594	917	1272	16
Ladder Rail Straight Chrome	D-TSC 48x20	1211 (48)	500 (20)	737	1138	1578	21
Ladder Rail Straight Chrome	D-TSC 48x24	1211 (48)	600 (24)	875	1350	1873	25
Ladder Rail Straight Chrome	D-TSC 69x20	1744 (69)	500 (20)	1088	1678	2328	31
Ladder Rail Straight Chrome	D-TSC 69x24	1744 (69)	600 (24)	1287	1986	2754	35
Ladder Rail Curved White	D-TCW 30x20	760 (30)	500 (20)	629	970	1345	14
Ladder Rail Curved White	D-TCW 30x24	760 (30)	600 (24)	753	1162	1611	16
Ladder Rail Curved White	D-TCW 48x20	1211 (48)	500 (20)	952	1469	2037	21
Ladder Rail Curved White	D-TCW 48x24	1211 (48)	600 (24)	1129	1743	2417	25
Ladder Rail Curved White	D-TCW 69x20	1744 (69)	500 (20)	1405	2167	3006	31
Ladder Rail Curved White	D-TCW 69x24	1744 (69)	600 (24)	1661	2563	3555	35
Ladder Rail Curved Chrome	D-TCC 30x20	760 (30)	500 (20)	534	823	1142	14
Ladder Rail Curved Chrome	D-TCC 30x24	760 (30)	600 (24)	639	986	1368	16
Ladder Rail Curved Chrome	D-TCC 48x20	1211 (48)	500 (20)	793	1224	1697	21
Ladder Rail Curved Chrome	D-TCC 48x24	1211 (48)	600 (24)	941	1452	2014	25
Ladder Rail Curved Chrome	D-TCC 69x20	1744 (69)	500 (20)	1170	1805	2504	33
Ladder Rail Curved Chrome	D-TCC 69x24	1744 (69)	600 (24)	1384	2136	2962	36

DESCRIPTION	MODEL	HEIGHT mm (inches)	LENGTH mm (inches)	DISTANCE BETWEEN CONNECTIONS mm (inches)	DISTANCE FROM WALL mm (inches)
Ladder Rail Straight White	D-TSW 27X16	678 (27)	400 (16)	356 (14)	71-82 (2 3/4-3 1/4)
Ladder Rail Straight White	D-TSW 30X20	760 (30)	500 (20)	456 (18)	71-82 (2 3/4-3 1/4)
Ladder Rail Straight White	D-TSW 30X24	760 (30)	600 (24)	556 (21 7/8)	71-82 (2 3/4-3 1/4)
Ladder Rail Straight White	D-TSW 48X20	1211 (48)	500 (20)	456 (18)	71-82 (2 3/4-3 1/4)
Ladder Rail Straight White	D-TSW 48X24	1211 (48)	600 (24)	556 (21 7/8)	71-82 (2 3/4-3 1/4)
Ladder Rail Straight White	D-TSW 69X20	1744 (69)	500 (20)	456 (18)	71-82 (2 3/4-3 1/4)
Ladder Rail Straight White	D-TSW 69X24	1744 (69)	600 (24)	556 (21 7/8)	71-82 (2 3/4-3 1/4)
Ladder Rail Straight Chrome	D-TSC 27X16	678 (27)	400 (16)	356 (14)	71-82 (2 3/4-3 1/4)
Ladder Rail Straight Chrome	D-TSC 30X20	760 (30)	500 (20)	456 (18)	71-82 (2 3/4-3 1/4)
Ladder Rail Straight Chrome	D-TSC 30X24	760 (30)	600 (24)	556 (21 7/8)	71-82 (2 3/4-3 1/4)
Ladder Rail Straight Chrome	D-TSC 48X20	1211 (48)	500 (20)	456 (18)	71-82 (2 3/4-3 1/4)
Ladder Rail Straight Chrome	D-TSC 48X24	1211 (48)	600 (24)	556 (21 7/8)	71-82 (2 3/4-3 1/4)
Ladder Rail Straight Chrome	D-TSC 69X20	1744 (69)	500 (20)	456 (18)	71-82 (2 3/4-3 1/4)
Ladder Rail Straight Chrome	D-TSC 69X24	1744 (69)	600 (24)	556 (21 7/8)	71-82 (2 3/4-3 1/4)
Ladder Rail Curved White	D-TCW 30X20	760 (30)	500 (20)	456 (18)	71-82 (2 3/4-3 1/4)
Ladder Rail Curved White	D-TCW 30X24	760 (30)	600 (24)	556 (21 7/8)	71-82 (2 3/4-3 1/4)
Ladder Rail Curved White	D-TCW 48X20	1211 (48)	500 (20)	456 (18)	71-82 (2 3/4-3 1/4)
Ladder Rail Curved White	D-TCW 48X24	1211 (48)	600 (24)	556 (21 7/8)	71-82 (2 3/4-3 1/4)
Ladder Rail Curved White	D-TCW 69X20	1744 (69)	500 (20)	456 (18)	71-82 (2 3/4-3 1/4)
Ladder Rail Curved White	D-TCW 69X24	1744 (69)	600 (24)	556 (21 7/8)	71-82 (2 3/4-3 1/4)
Ladder Rail Curved Chrome	D-TCC 30X20	760 (30)	500 (20)	456 (18)	71-82 (2 3/4-3 1/4)
Ladder Rail Curved Chrome	D-TCC 30X24	760 (30)	600 (24)	556 (21 7/8)	71-82 (2 3/4-3 1/4)
Ladder Rail Curved Chrome	D-TCC 48X20	1211 (48)	500 (20)	456 (18)	71-82 (2 3/4-3 1/4)
Ladder Rail Curved Chrome	D-TCC 48X24	1211 (48)	600 (24)	556 (21 7/8)	71-82 (2 3/4-3 1/4)
Ladder Rail Curved Chrome	D-TCC 69X20	1744 (69)	500 (20)	456 (18)	71-82 (2 3/4-3 1/4)
Ladder Rail Curved Chrome	D-TCC 69X24	1744 (69)	600 (24)	556 (21 7/8)	71-82 (2 3/4-3 1/4)

EXPRESS RADIANT LTD. PURSUE A POLICY OF CONTINUING IMPROVEMENT IN DESIGN AND PERFORMANCE OF THE PRODUCTS WE SELL. THE RIGHT IS THEREFORE RESERVED TO VARY SPECIFICATIONS AND PRICING WITHOUT NOTICE.
Stelrad®, Superchannel® and Superstand® North American Distributor | ©2026 Express Radiant Ltd.

Ladder Rail Towel Warmers Rough-In and Technical Data

Straight Ladder Rail

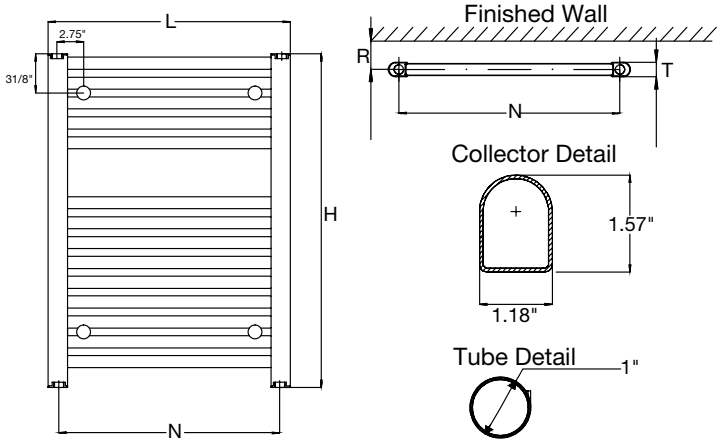

Curved Ladder Rail

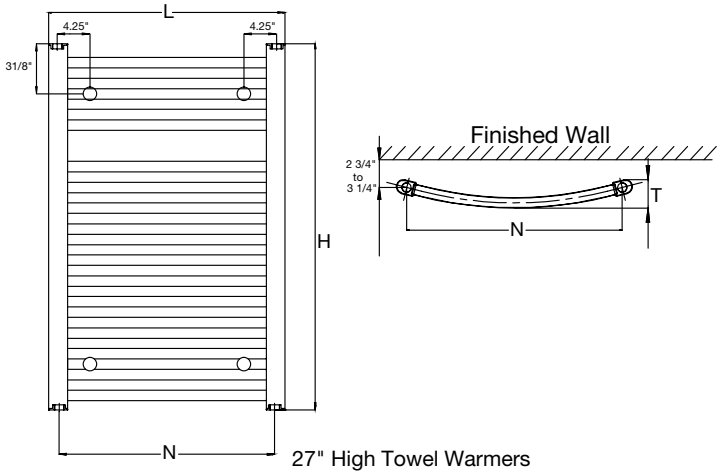

MODEL	LENGTH	HEIGHT	N	R	T	#TUBES
D-TSW 27x16	15 3/4"	26 3/4"	14"	2 3/4"-3 1/4"	1 1/8"	14
D-TSW 30x20	19 5/8"	30"	18"	2 3/4"-3 1/4"	1 1/8"	16
D-TSW 30x24	23 5/8"	30"	21 7/8"	2 3/4"-3 1/4"	1 1/8"	16
D-TSW 48x20	19 5/8"	47 5/8"	18"	2 3/4"-3 1/4"	1 1/8"	25
D-TSW 48x24	23 5/8"	47 5/8"	21 7/8"	2 3/4"-3 1/4"	1 1/8"	25
D-TSW 69x20	19 5/8"	68 5/8"	18"	2 3/4"-3 1/4"	1 1/8"	36
D-TSW 69x24	23 5/8"	68 5/8"	21 7/8"	2 3/4"-3 1/4"	1 1/8"	36
D-TSC 27x16	15 3/4"	26 3/4"	14"	2 3/4"-3 1/4"	1 1/8"	14
D-TSC 30x20	19 5/8"	30"	18"	2 3/4"-3 1/4"	1 1/8"	16
D-TSC 30x24	23 5/8"	30"	21 7/8"	2 3/4"-3 1/4"	1 1/8"	16
D-TSC 48x20	19 5/8"	47 5/8"	18"	2 3/4"-3 1/4"	1 1/8"	25
D-TSC 48x24	23 5/8"	47 5/8"	21 7/8"	2 3/4"-3 1/4"	1 1/8"	25
D-TSC 69x20	19 5/8"	68 5/8"	18"	2 3/4"-3 1/4"	1 1/8"	36
D-TSC 69x24	23 5/8"	68 5/8"	21 7/8"	2 3/4"-3 1/4"	1 1/8"	36
D-TCW 30x20	19 5/8"	30"	18"	2 3/4"-3 1/4"	2 1/4"	16
D-TCW 30x24	23 5/8"	30"	21 7/8"	2 3/4"-3 1/4"	2 3/8"	16
D-TCW 48x20	19 5/8"	47 5/8"	18"	2 3/4"-3 1/4"	2 1/4"	25
D-TCW 48x24	23 5/8"	47 5/8"	21 7/8"	2 3/4"-3 1/4"	2 3/8"	25
D-TCW 69x20	19 5/8"	68 5/8"	18"	2 3/4"-3 1/4"	2 1/4"	36
D-TCW 69x24	23 5/8"	68 5/8"	21 7/8"	2 3/4"-3 1/4"	2 3/8"	36
D-TCC 30x20	19 5/8"	30"	18"	2 3/4"-3 1/4"	2 1/4"	16
D-TCC 30x24	23 5/8"	30"	21 7/8"	2 3/4"-3 1/4"	2 3/8"	16
D-TCC 48x20	19 5/8"	47 5/8"	18"	2 3/4"-3 1/4"	2 1/4"	25
D-TCC 48x24	23 5/8"	47 5/8"	21 7/8"	2 3/4"-3 1/4"	2 3/8"	25
D-TCC 69x20	19 5/8"	68 5/8"	18"	2 3/4"-3 1/4"	2 1/4"	36
D-TCC 69x24	23 5/8"	68 5/8"	21 7/8"	2 3/4"-3 1/4"	2 3/8"	36

27" High Towel Warmers

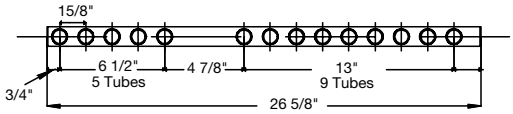

30" High Towel Warmers

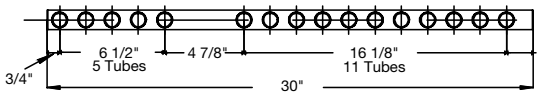

48" High Towel Warmers

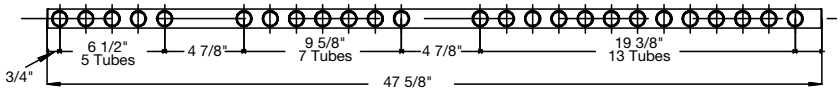

69" High Towel Warmers

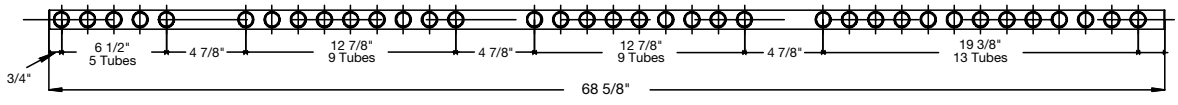

EXPRESS RADIANT LTD. PURSUE A POLICY OF CONTINUING IMPROVEMENT IN DESIGN AND PERFORMANCE OF THE PRODUCTS WE SELL. THE RIGHT IS THEREFORE RESERVED TO VARY SPECIFICATIONS AND PRICING WITHOUT NOTICE.
Stelrad®, Superchannel® and Superstand® North American Distributor | ©2026 Express Radiant Ltd.